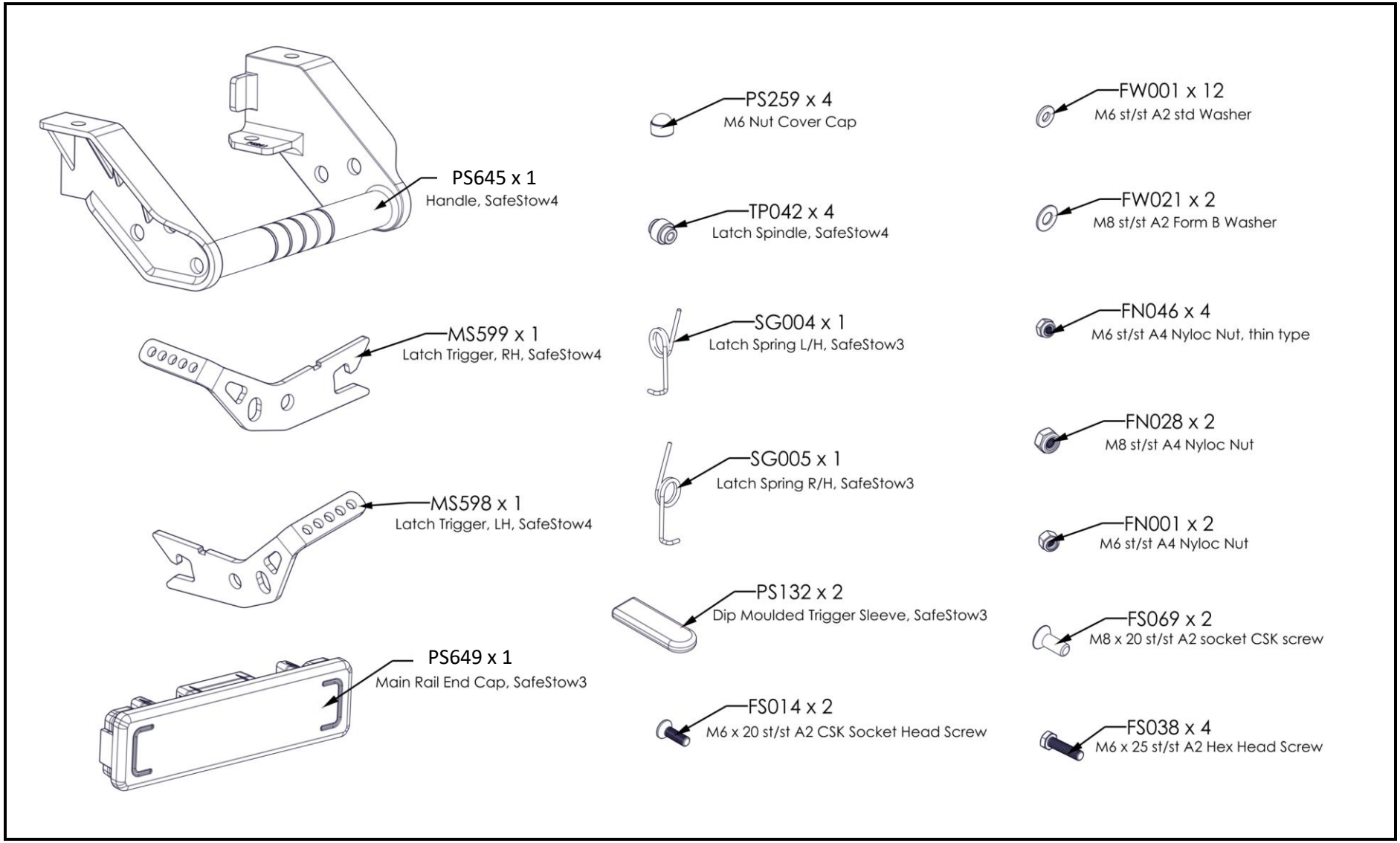

Manufactured by AVS Steps in the United Kingdom
Zone 2, Deeside Industrial Park, Sixth Ave, Deeside CH5 2LB, UK, +44 (0) 1244 833790

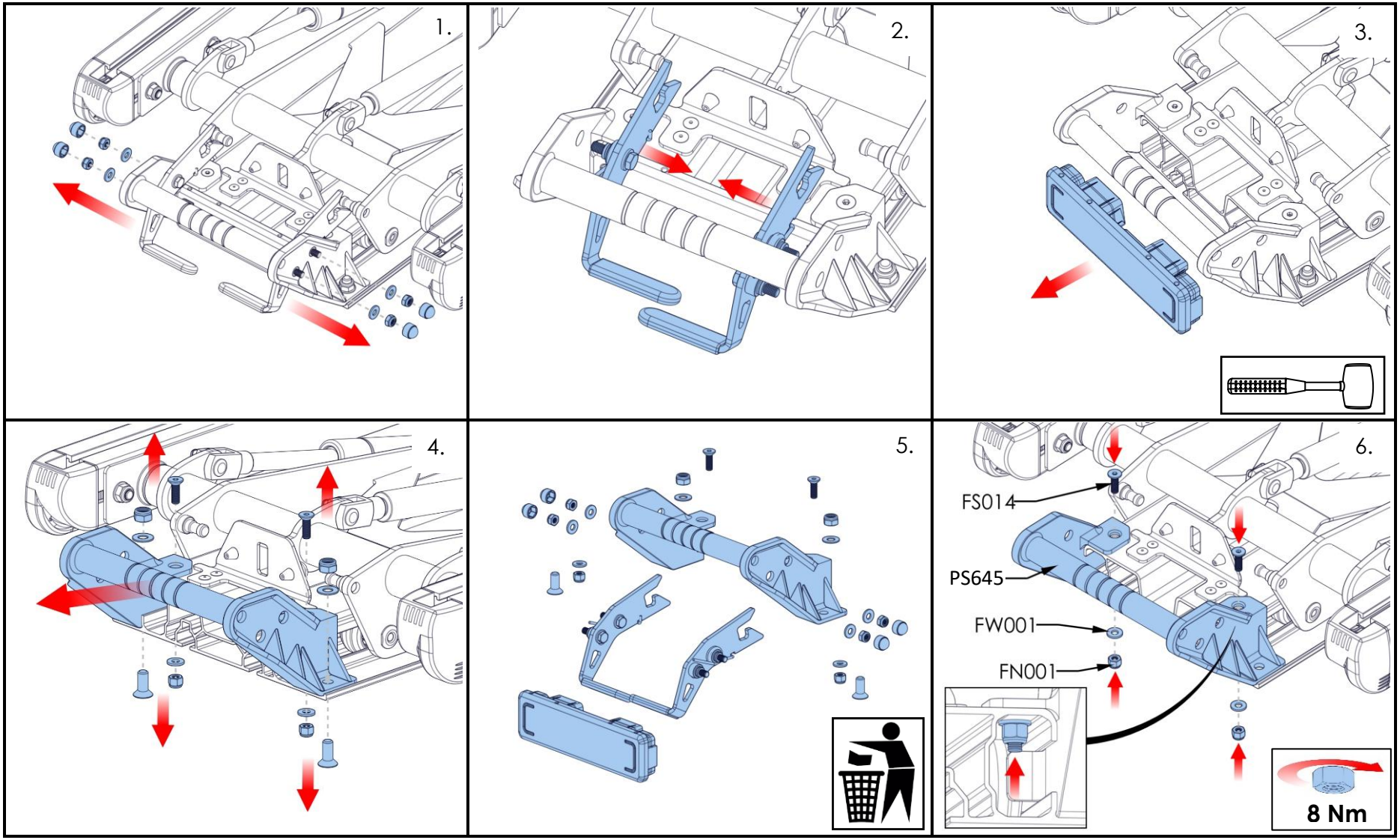
1.
2.
3.
4.
5.
6.
FS014
PS645
FW001
FN001
8 Nm

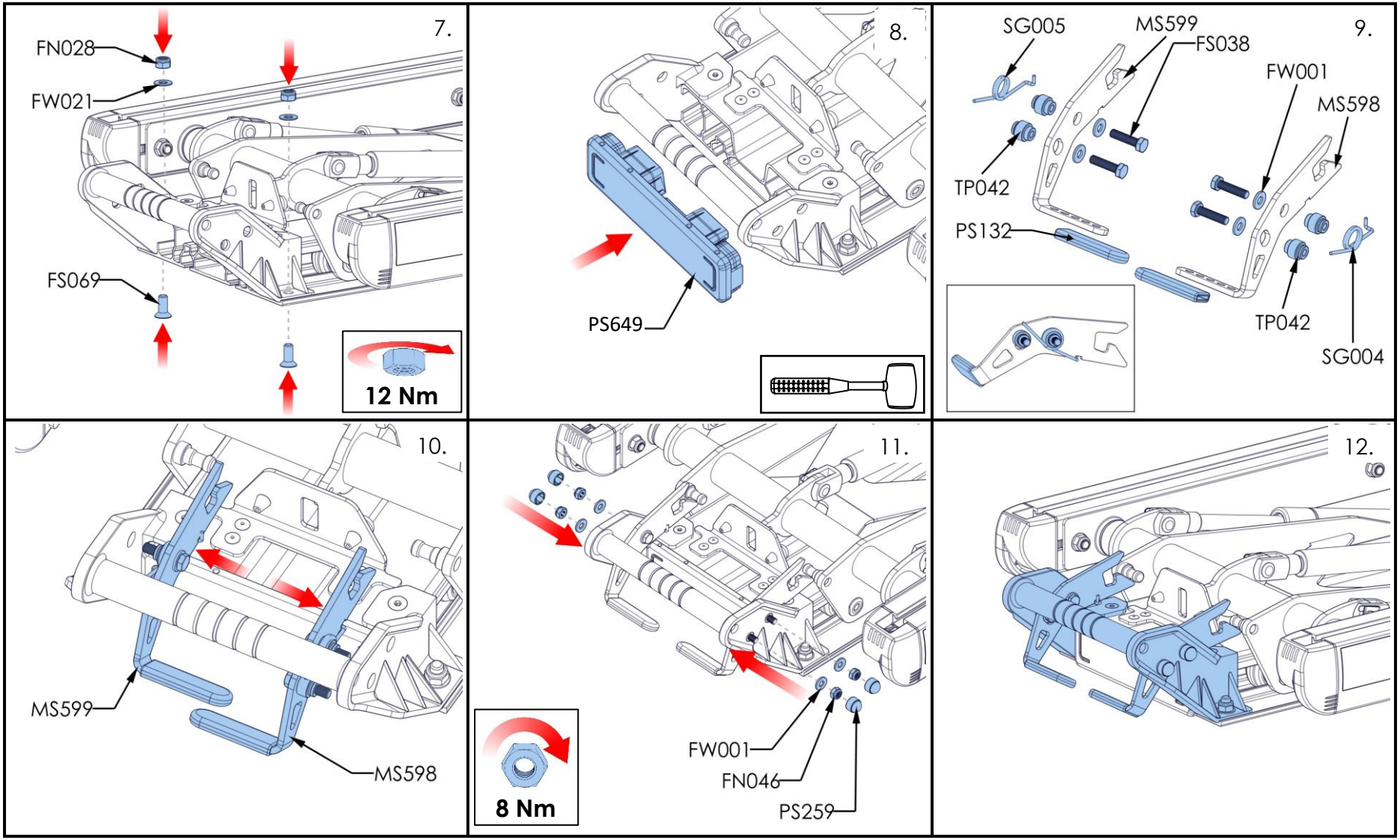
7.
FN028
FW021
FS069
12 Nm
8.
PS649
9.
SG005
MS599
FS038
FW001
MS598
TP042
PS132
TP042
SG004
10.
MS599
MS598
11.
FW001
FN046
PS259
8 Nm
12.